PO Box 6256
Mobile AL, 36606
1-800-771-6643

SPRAY FOAM DETAILS

Edge Metal Coping

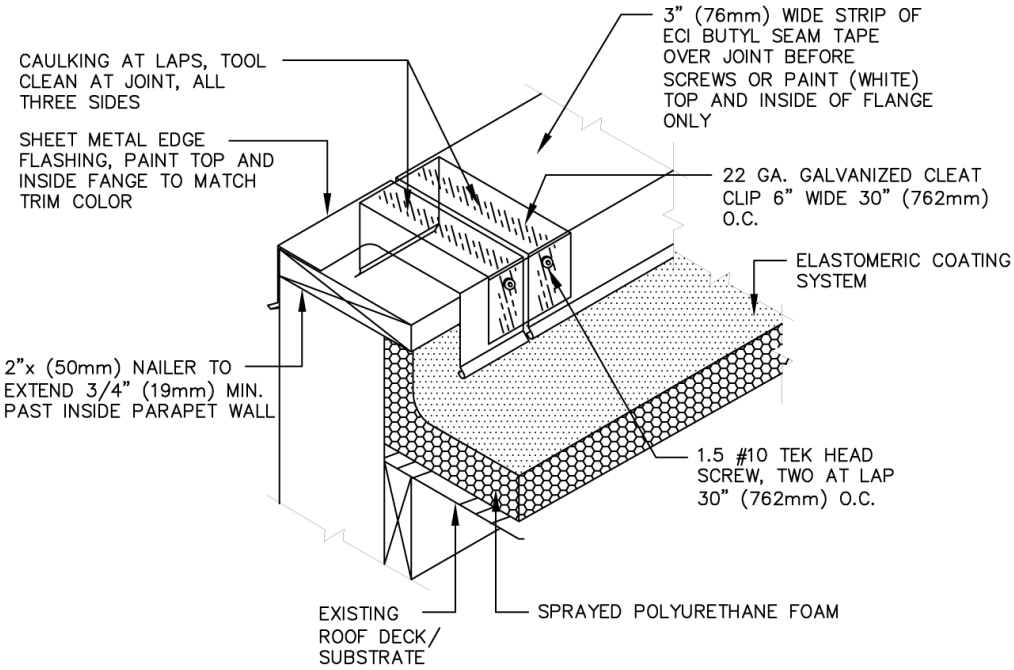

EdgeMetalCoping

P.O. Box 6256
Mobile, AL 36660
1-800-771-6643 - Toll Free
251-476-7385 - Office
251-479-3602 - Fax
Sales@WeatherStar.net
www.AmericanWeatherStar.com